Experiment No: 00

Title of the Experiment

Student Name:	A. B. C. Surname
Student Number:	PS/0000/000
Partner Name:	D. E. F. Surname
Partner Number:	PS/0000/000
Date Performed:	DD/MM/YYYY
Date of Submission:	DD/MM/YYYY

Date: DD/MM/YYYY

Experiment No: 00

Experiment Name: Title of the Experiment.

Apparatus

- Op-Amp
  - 741
- Resistors
  - $470 \times 10^3\,\Omega$
  - $470 \times 10^3\,\Omega \times 3$
  - $100\,\Omega \times 2$
- Capacitors
  - $0{\cdot}1 \times 10^{-6}$ F
  - $0{\cdot}01 \times 10^{-6}$ F
- Dual Beam Oscilloscope
- Signal Generator
- Dual Rail Power Supply
- Connecting Wires
- Breadboard

Theory and Diagrams

AC Inverting Amplifier

Lorem ipsum dolor sit amet, consectetur adipiscing elit, sed do eiusmod tempor incididunt ut labore et dolore magna aliqua. Ut enim ad minim veniam, quis nostrud exercitation ullamco laboris nisi ut aliquip ex ea commodo consequat. Duis aute irure dolor in reprehenderit in voluptate velit esse cillum dolore eu fugiat nulla pariatur. Excepteur sint occaecat cupidatat non proident, sunt in culpa qui officia deserunt mollit anim id est laborum.

Lorem ipsum dolor sit amet, consectetur adipiscing elit, sed do eiusmod tempor incididunt ut labore et dolore magna aliqua. Ut enim ad minim veniam, quis nostrud exercitation ullamco laboris nisi ut aliquip ex ea commodo consequat. Duis aute irure dolor in reprehenderit in voluptate velit esse cillum dolore eu fugiat nulla pariatur. Excepteur sint occaecat cupidatat non proident, sunt in culpa qui officia deserunt mollit anim id est laborum.

$$V_o = \left(\frac{j\omega C_i R_f}{1 + j\omega C_i R_f}\right) V_{in}$$

Lorem ipsum dolor sit amet, consectetur adipiscing elit, sed do eiusmod tempor incididunt ut labore et dolore magna aliqua. Ut enim ad minim veniam, quis nostrud exercitation ullamco laboris nisi ut aliquip ex ea commodo consequat. Duis aute irure dolor in reprehenderit in voluptate velit esse cillum dolore eu fugiat nulla pariatur.

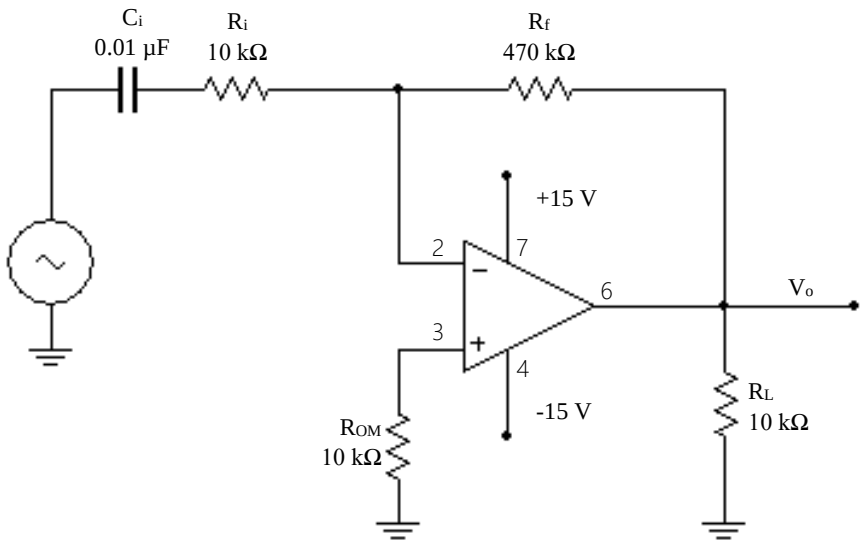

Figure 1 - Inverting amplifier

Excepteur sint occaecat cupidatat non proident, sunt in culpa qui officia deserunt mollit anim id est laborum.

$$\therefore V_o = -\left(\frac{R_f}{R_i}\right) V_{in}$$

Procedure

Part A

1) Figure 1 circuit was constructed on the breadboard.
2) Signal generator was turned on and set to 100 mV peak to peak amplitude 100 Hz sine wave.
3) Output signal amplitude was observed using the oscilloscope while changing the input frequency.

Part B

1) Figure 3 circuit was constructed by changing the first circuit.
2) Output signal amplitude was observed using the oscilloscope while changing the input frequency from 100 Hz to 10 kHz.
3) The output voltage and the offset voltage were measured for each supply voltage.

Observations PS/0000/000 DD/MM/YYYY

{HAND WRITTEN CONTENT}

Calculations

At input voltage = 0·1 V pp

Input frequency ($x10^3$ Hz)	Output Voltage (V)		Voltage Gain		Voltage Gain (dB)	
	Dual rail power supply	Single rail power Supply	Dual rail power supply	Single rail power Supply	Dual rail power supply	Single rail power Supply
1	0·36	0·12	3·6	1·2	11·13	1·58
2	0·70	0·50	7·0	5·0	16·90	13·98
3	1·08	0·88	10·8	8·8	20·67	18·89

Calculations

Experimental,

$$Bandwidth = f_{high} - f_{low}$$

For circuit 1,

$$Bandwidth = 15000 - 1300$$

$$\underline{Bandwidth = 13700\ Hz}$$

For circuit 2,

$$Bandwidth = 21000 - 1100$$

$$\underline{Bandwidth = 20900Hz}$$

Theoretical,

$$A_{VCL} = \frac{R_f}{R_i}$$

For circuit 1,

$$A_{VCL} = \frac{470 \times 10^3}{10 \times 10^3}$$

$$\underline{A_{VCL} = 47}$$

For circuit 1,

$$A_{VCL} = \frac{470 \times 10^3}{10 \times 10^3}$$

$$\underline{A_{VCL} = 47}$$

$$Bandwidth = \frac{A_{VOL} \cdot BW_{OL}}{A_{VCL}}$$

For circuit 1,

$$Bandwidth = \frac{10^5 \cdot 10}{47}$$

$$\underline{Bandwidth = 21276{\cdot}59\ Hz}$$

For circuit 2,

$$Bandwidth = \frac{10^5 \cdot 10}{47}$$

$$\underline{Bandwidth = 21276{\cdot}59\ Hz}$$

Conclusion

Lorem ipsum Value:

Experimental :$1 \cdot 2345 \times 10^5$ V

Theoretical :$1 \cdot 2534 \times 10^5$ V

Circuit		Voltage Gain (dB)	Bandwidth (Hz)	Low Cutoff frequency (Hz)	High cutoff frequency (x10^3 Hz)
Figure 1	Experimental	33·98	13700	1300	15
	Theoretical	47·00	21277	1591	-
Figure 2	Experimental	33·98	20900	1100	21
	Theoretical	47·00	21277	1591	-

Discussion

Lorem ipsum dolor sit amet, consectetur adipiscing elit, sed do eiusmod tempor incididunt ut labore et dolore magna aliqua. Ut enim ad minim veniam, quis nostrud exercitation ullamco laboris nisi ut aliquip ex ea commodo consequat. Duis aute irure dolor in reprehenderit in voluptate velit esse cillum dolore eu fugiat nulla pariatur. Excepteur sint occaecat cupidatat non proident, sunt in culpa qui officia deserunt mollit anim id est laborum.

Lorem ipsum dolor sit amet, consectetur adipiscing elit, sed do eiusmod tempor incididunt ut labore et dolore magna aliqua. Ut enim ad minim veniam, quis nostrud exercitation ullamco laboris nisi ut aliquip ex ea commodo consequat. Duis aute irure dolor in reprehenderit in voluptate velit esse cillum dolore eu fugiat nulla pariatur. Excepteur sint occaecat cupidatat non proident, sunt in culpa qui officia deserunt mollit anim id est laborum.

At vero eos et accusamus et iusto odio dignissimos ducimus qui blanditiis praesentium voluptatum deleniti atque corrupti quos dolores et quas molestias excepturi sint occaecati cupiditate non provident, similique sunt in culpa qui officia deserunt mollitia animi, id est laborum et dolorum fuga. Et harum quidem rerum facilis est et expedita distinctio. Nam libero tempore, cum soluta nobis est eligendi optio cumque nihil impedit quo minus id quod maxime placeat facere possimus, omnis voluptas assumenda est, omnis dolor repellendus. Temporibus autem quibusdam et aut officiis debitis aut rerum necessitatibus saepe eveniet ut et voluptates repudiandae sint et molestiae non recusandae. Itaque earum rerum hic tenetur a sapiente delectus, ut aut reiciendis voluptatibus maiores alias consequatur aut perferendis doloribus asperiores repellat.